The NATIONAL NC 'Sixty' special RECEIVER

With Alignment Procedure
See Schematic

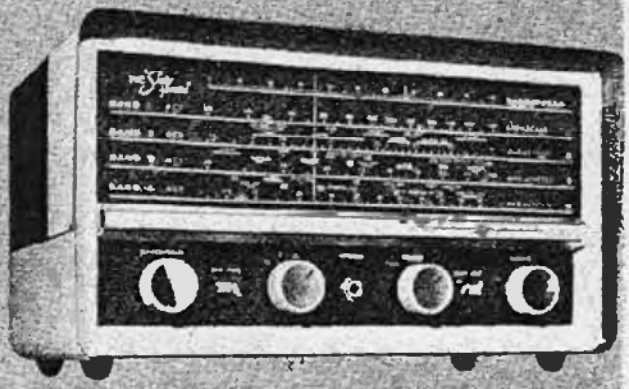

Lucio IK2AYR

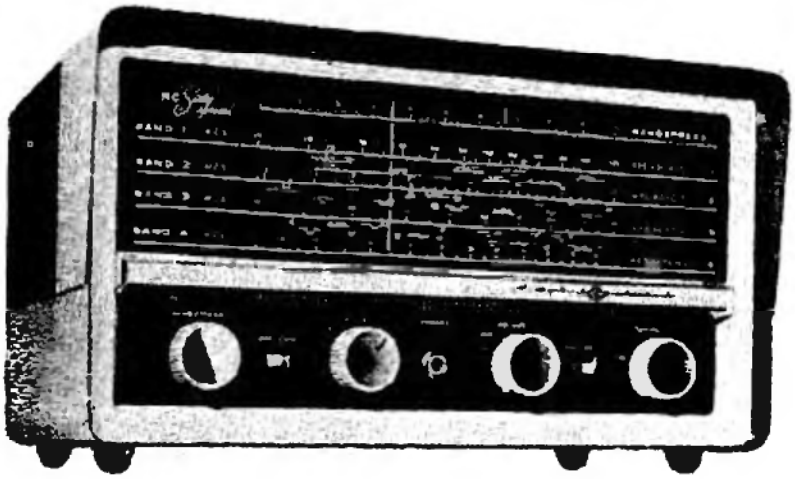

Figure 1-1. National NC "Sixty" Special Receiver

SECTION 1 - DESCRIPTION

1.0 GENERAL

Your NC "SIXTY" SPECIAL, as illustrated in figure 1-1, is an AC-DC superheterodyne communications receiver designed to receive AM (voice or music) and CW (code-telegraphy) signals. Its frequency range is from 540 kc through 31 mc inclusive and provides coverage for all signals from standard broadcast through the 10-meter amateur band.

1.1 DESIGN CONSIDERATIONS

Although the NC "SIXTY" SPECIAL is primarily designed for use by Amateur Radio Operators and Short-wave Listeners, its excellent broadcast reception, audio reproduction, and contemporary cabinet styling make it a fine home receiver. The built-in loudspeaker is perfectly matched to the enclosure in order to provide the best possible sound reproduction for a receiver of this size. The cabinet is finished in light and dark blue and is styled to blend well in any surroundings. The receiver rests on four rubber feet that provide sonic isolation and protect the surface on which it sits.

The total frequency range covered by your NC "SIXTY" SPECIAL is divided into four bands, whose frequency coverage is given in Table I.

TABLE I

BAND	FREQUENCY COVERAGE
1	550 kc to 1600 kc
2	1.6 mc to 4.5 mc
3	4.0 mc to 12.0 mc
4	10.5 mc to 31.0 mc

Of special interest to the "HAM" or "SWL" is the electrical bandspread feature of your NC

"SIXTY" SPECIAL. This feature allows the operator to select a small segment of any of the four general coverage bands and spread the tuning of that segment over more than half of the length of the tuning scale. This allows a far greater degree of selectivity in the crowded short-wave bands than is possible with a nonbandspread type receiver.

Your NC "SIXTY" SPECIAL has a complement of five tubes including a rectifier. A great contributing factor to the compactness of this receiver is the fact that multi-purpose tubes are used in it wherever they are practicable. The tube types used and their functions are given in Table II.

1.2 DIAL SCALES

An outstanding feature of your NC "SIXTY" SPECIAL is the giant, easy-to-read dial. Large, white markings on a dark background are used to provide outstanding clarity. Police, civil defense, marine, aircraft, amateur and foreign stations are clearly marked on all general-coverage bands. Each identifying marking in the short-wave bands is underlined to show the range of frequencies covered by that particular type of signal. For example, the 80-meter amateur band, located at the high end of BAND 2, is underlined between 3.5 and 4.0 megacycles indicating that amateur signals will be located between these frequencies.

TABLE II

SYM. NO.	TYPE	FUNCTION
V1	12BE6	Oscillator-Converter
V2	12BA6	IF Amplifier, CW Oscillator
V3	12AV6	Detector-AVC-1st Audio Amplifier
V4	50C5	Power Amplifier
V5	35W4	Rectifier

SECTION 2 - INSTALLATION

2.0 PLACEMENT

The contemporary cabinet styling and coloring of your NC "SIXTY" SPECIAL are such that it will be right at home in any room in the house. The physical location is not critical since the cabinet has been designed to allow more than adequate ventilation.

2.1 CONNECTIONS

When connecting the receiver to a DC power source it will be necessary to determine the correct polarity by reversing the power plug. The receiver will operate only when the plug is properly polarized.

The most practical antenna for use in installations where the NC "SIXTY" SPECIAL is to be

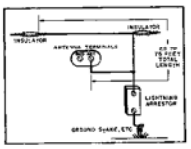

Figure 2-1. Typical Antenna Set-up

used over a wide range of frequencies is the single-wire type. An antenna length of from 50 to 75 feet of wire is recommended, but the length is not critical and any length from 25 to 75 feet will produce satisfactory results.

A typical antenna setup is illustrated in figure 2-1. Sometimes, a ground connection may be used to improve performance of your NC "SIXTY" SPECIAL.

SECTION 3 - OPERATION

3.0 CONTROLS AND SWITCHES

In figure 3-1, the controls and switches used on the NC "SIXTY" SPECIAL are identified and their functions are described.

3.1 INITIAL SETTINGS

Your NC "SIXTY" SPECIAL is set up for operation as follows:

1. BANDSPREAD control.—Adjust so that pointer on BANDSPREAD scale is in SET position.
2. OFF-CWO switch.—Set in OFF position.
3. Bandswitch.—Set in position 1.
4. VOLUME-OFF-ON control.—Adjust to desired listening level.
5. STBY-REC switch.—Set in REC position.
6. TUNING control.—Adjust to tune in local broadcast station.

The preceding procedures will serve two purposes; they will check out your NC "SIXTY" SPECIAL for AM operation and will enable you to become familiar with the use of the controls.

3.2 TUNING

General-coverage tuning of your NC "SIXTY" SPECIAL is accomplished by setting the BANDSPREAD pointer at its SET position, selecting the range of frequencies desired by placing the bandswitch in the appropriate position, (positions 1 through 4 on this switch correspond to bands 1 through 4 on the general-coverage scales), and adjusting the TUNING control to the desired frequency setting.

Bandspread tuning is accomplished by setting the general-coverage pointer at the high end of the frequency range to be tuned and by adjusting the BANDSPREAD control in a counter clockwise direction to select the desired station.

The BANDSPREAD scale has an arbitrary linear calibration to be used for station logging. To log station, note both the position of the general coverage pointer and the bandspread pointer. This notation will allow you to retune this station accurately at any future time.

3.3 CW OPERATION

CW, or code telegraphy operation, is performed in exactly the same manner as AM operation except that the OFF-CW switch is placed in its CW position. This setting activates a beat-frequency oscillator which produces an audible tone when keyed by the incoming signal.

3.4 HEADPHONE-SPEAKER SELECTION

Under normal operating conditions, the built-in PM loudspeaker in your NC "SIXTY" SPECIAL is used. If headphone reception is desired, a phone-jack, which will accept any standard two-pole phone plug, is provided in the center of the control panel. When the phone plug is inserted in this jack the built-in loudspeaker is automatically disconnected. The impedance of the headphone circuit is not critical, and use of various types of headphones including crystal types is allowed.

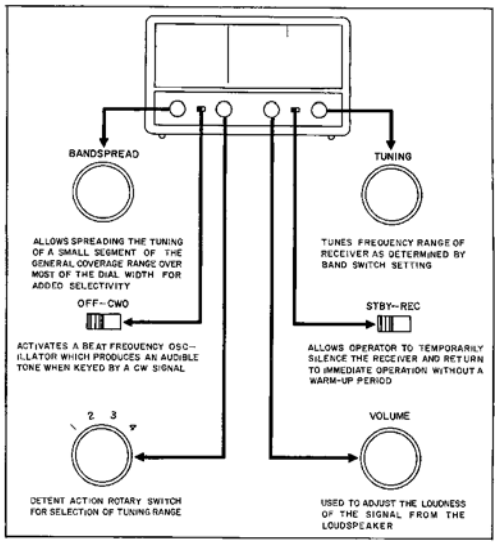

Figure 3-1. NC "Sixty" Special Controls and Switches

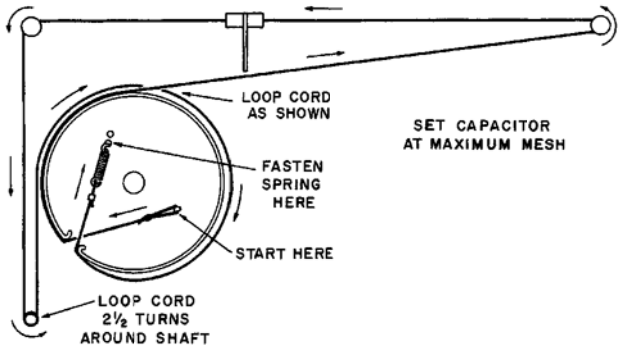

TO REPLACE
BAND SPREAD DIAL
CORD ASSEMBLY

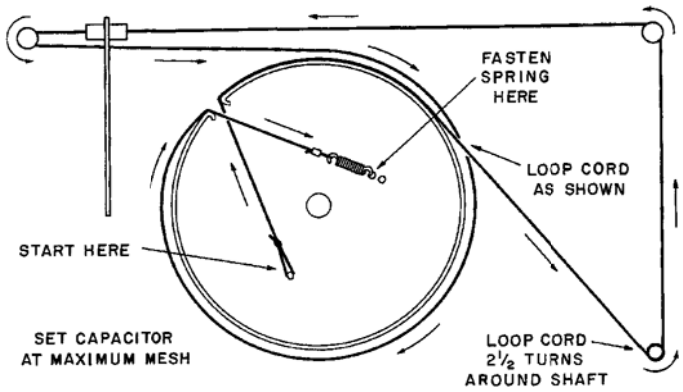

TO REPLACE
GENERAL COVERAGE DIAL
CORD ASSEMBLY

Place your mouse over the sticky notes.

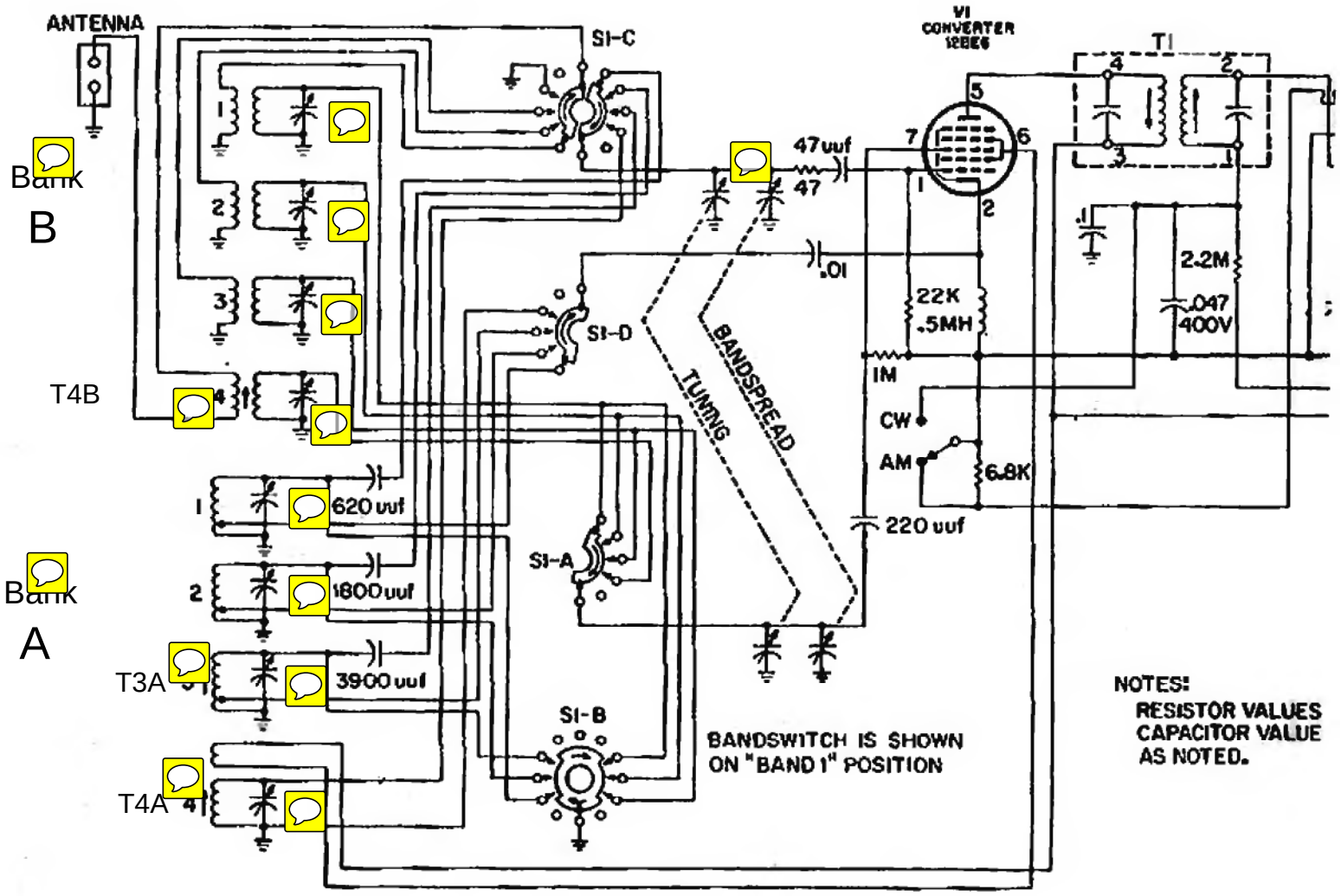

Alignment Procedure

You will need an RF Signal Generator (.455 MHz - 40 MHz). The generator must also be able to output a modulated AM output.
An Oscilloscope is desirable but not necessary, if you have a good ear then you don't need one.

WARNING: This is a HOT CHASSIS radio. Use an ungrounded Isolation Transformer to power the radio.

Set the Band Selector to 1 (Standard Broadcast)

1. Connect the high side of the generator through a .01 mfd capacitor to the stator plates of the front section of the TUNING capacitor. Low side to the chassis. Set the generator to .455 MHz, and modulate the signal. Connect the Oscilloscope to the speaker terminals. Set the Band Selector to Band #1 and set the Tuning Dial to 1000. Adjust both Bottom and Top slugs of the IF transformers T1 and T2 for the loudest or greatest deflection on the scope.
2. Connect the high side of the generator to the antenna terminal and the low side to ground.
3. Set the generator to .550 MHz and set the tuning dial to .550 MHz. Referring to the picture of the chassis, adjust Trimmer Cap #1A for maximum output.
4. Set the generator to 1.5 MHz and the Tuning Dial to 1.5 MHz. Adjust Trimmer Cap #1B for maximum output.

Set the Band Selector to 2.

1. Set the generator to 1.6 MHz and the Tuning Dial to 1.6 MHz . Adjust Trimmer Cap #2A for maximum output.
2. Set the generator to 4.5 MHz and the Tuning Dial to 4.5 MHz. Adjust Trimmer Cap #2B for maximum output.

Set the Band Selector to 3.

1. Set the generator to 4.0 MHz and the Tuning Dial to 4 MHz. Adjust T3A and Trimmer Cap #3A for maximum output.
2. Set the generator to 12.0 MHz and the Tuning Dial to 12 MHz. Adjust Trimmer Cap #3B for maximum output.

Set the Band Selector to 4.

1. Set the generator to 11 MHz and the Tuning Dial to 11 MHz. Adjust T4A and Trimmer Cap #4A for maximum output.
2. Set the generator to 28 MHz and the Tuning Dial to 28 MHz. Adjust T4B and Trimmer Cap #4B for maximum output.

Denis Renaud
Wisc. USA

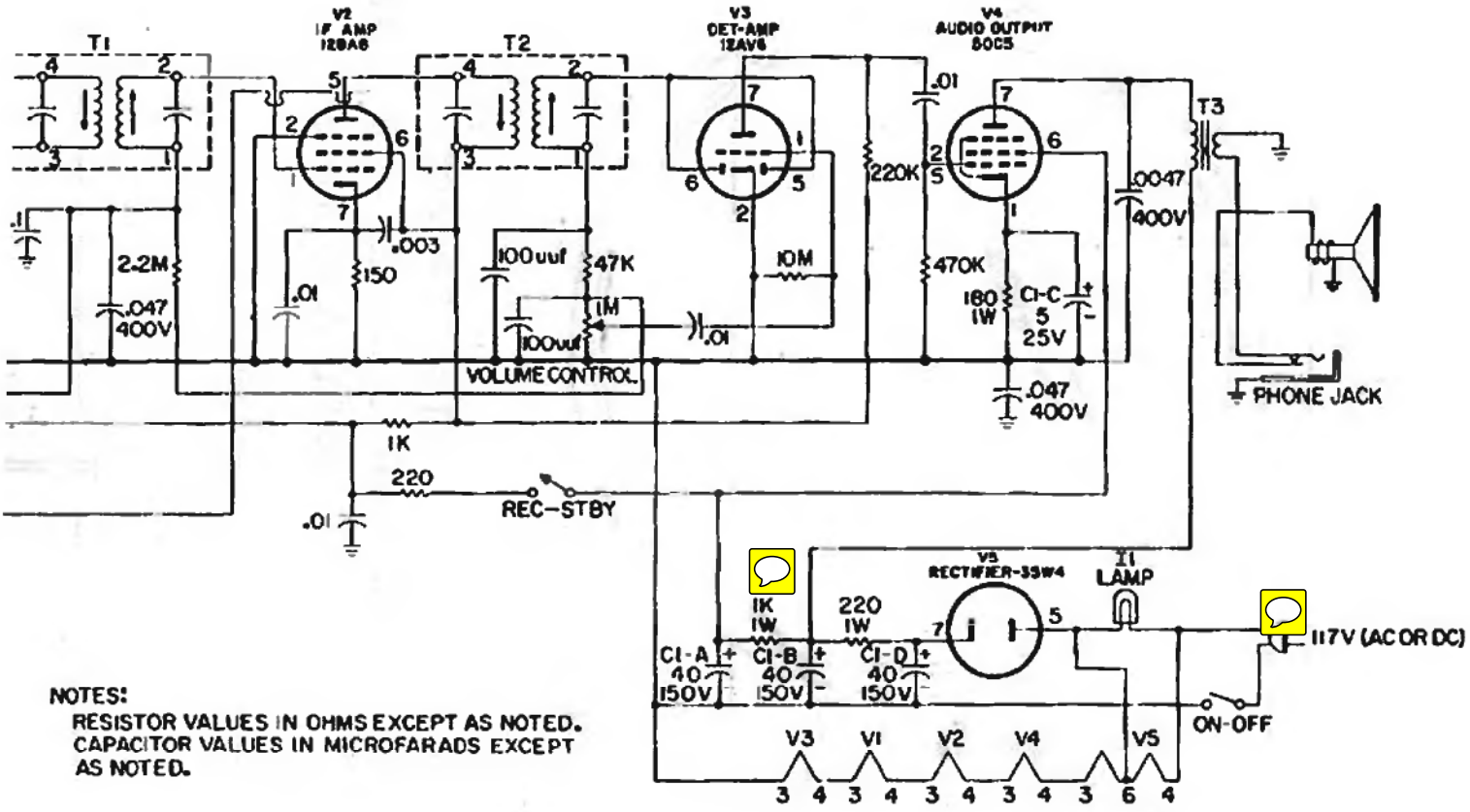

After making all the adjustments, I select different bands and tune to WWV verifying the needle is on the correct frequency. To get them dead on you will have to adjust the Trimmer Caps in group A then readjust the Caps in group B. Remember, Bands 3 and 4 work in conjunction with the Trimmer Cap bank A along with coils T3A and T4A.