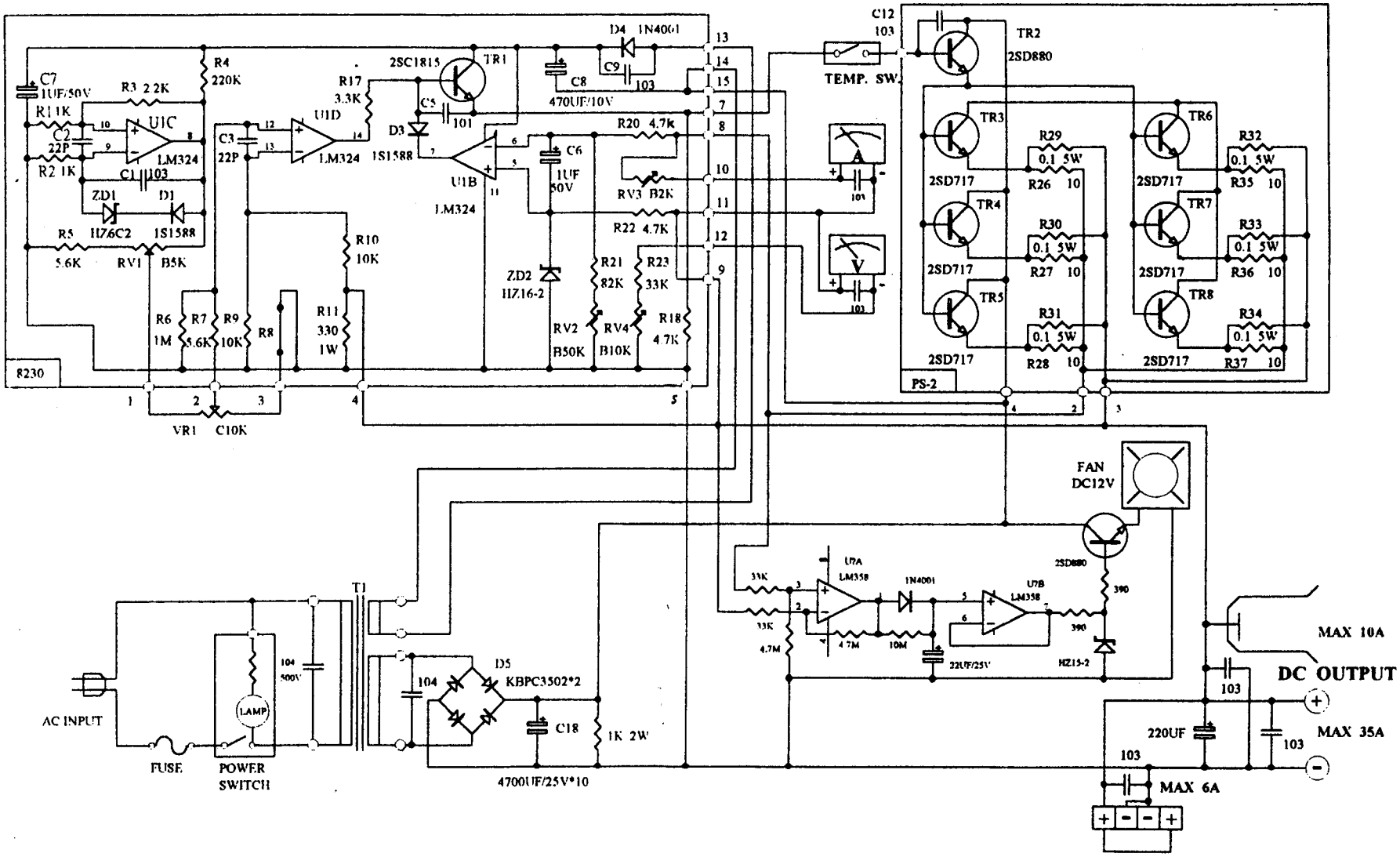MJF-4035MV Schematic Diagram