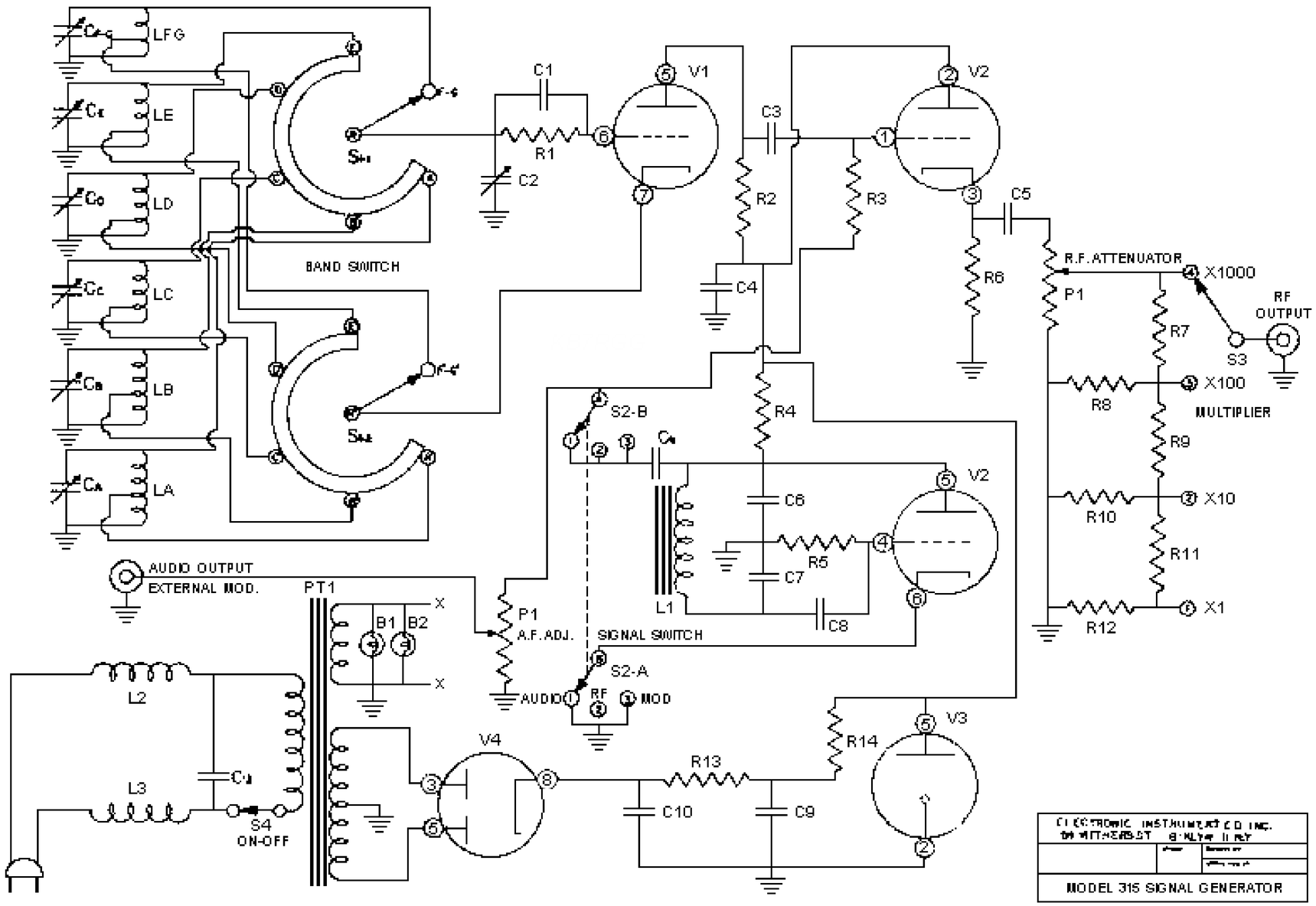

SYMBOL	PART #	SPECIFICATION
B1	1	#47 bulb
B2	1	#47 bulb
C1	2	100 mmfd cond.
C2	3	Main tuning cond.
C3	2	100 mmfd cond.
C4	4	.05 mfd cond.
C5	5	.001 mfd cond.
C6	6	.25 mfd cond.
C7	7	.5 mfd cond.
C8	4	.05 mfd cond.
C9,C10	8	Dual 10 mfd cond.
C11	9	.01 mfd cond.
C12	9	.01 mfd cond.
L1	54	Audio choke
L2,L3	55	Line filter
LABC	56	Low frequency coils
LDE	57	Middle frequency coils
LFG	58	High frequency coils
P1	59	1000 ohm 250K dual pot.
PT1	60	Power transformer
R1	61	22K ohm 1/2 watt
R2	62	510 ohm 1/2 watt
R3	63	1 meg 1/2 watt
R4	61	22K ohm 1/2 watt
R5	64	68K ohm 1/2 watt
R6	65	10K ohm 1/2 watt
R7	66	1000 ohm 1/2 watt
R8	67	100 ohm 1/2 watt
R9	66	1000 ohm 1/2 watt
R10	67	100 ohm 1/2 watt
R11	66	1000 ohm 1/2 watt
R12	67	100 ohm 1/2 watt
R13	68	6K ohms, 10 watt
R14	69	1K ohms, 1 watt
S1	70	2P-6Pos. switch
S2	71	2P-3Pos. switch
S3	72	1P-4Pos. switch
S4	73	SPST switch
V1	76	6C4 tube
V2	77	6SL7 tube
V3	78	VR150 tube
V4	79	6X5 tube

ELECTRONIC INSTRUMENT CO. INC.
84 VESEY ST. NEW YORK 7, N.Y.

MODEL 315 SIGNAL GENERATOR

EICO