INSTRUCTION MANUAL FOR

EICO

ELECTRONIC
INSTRUMENT CO., Inc.

33-00 NORTHERN BLVD. LONG ISLAND CITY 1, N. Y.

INSTRUCTION MANUAL FOR

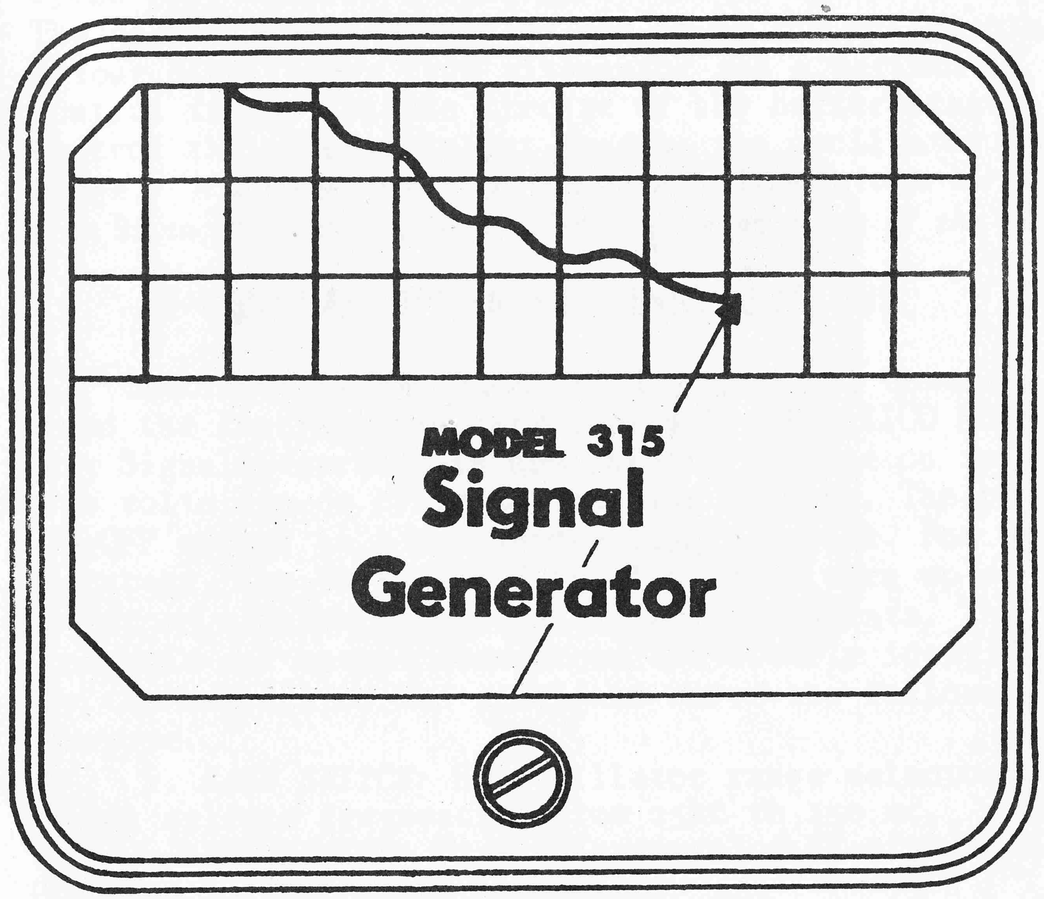

EICO

ELECTRONIC
INSTRUMENT CO., Inc.

1-DESCRIPTION

The EICO Model 315 Signal Generator consists of a highly stable electron coupled RF oscillator calibrated in seven bands, covering a frequency of 75kc to 150m, with overlap on each band. The RF oscillator is electron coupled to ½ of a $7F_7$ Buffer Stage for isolation. The second half of the $7F_7$ is used as an inductive type Audio Oscillator, which produces a 400 cycle pure sine wave with less than 5% distortion. The AF oscillator modulated the RF in the buffer stage. A four step ladder type altennator and a variable control in the cathode circuit of the buffer stage, control the output without loading the oscillator stage. *A voltage regulator tube permits line voltage variations from 95 to 135 volts without affecting the accuracy of the generator*

2-GENERAL OPERATING INSTRUCTIONS

Before using the EICO Model 315 Signal Generator, read the instructions very carefully. The EICO Model 315 Signal Generator is designed to operate on 105 to 120 volts, 50-60 cycle alternating current. The power ON-OFF switch is a bat handle toggle switch. For best accuracy, the unit should be allowed to warm up at least 15 minutes before making any alignments. The controls and output connectors are clearly identified by the makings on the panel and serve the following purpose.

1. *BAND SWITCH:* RF oscillator range selector, which selects frequencies from 75kc to 150 mc.
2. *ATTENUATOR:* Fine adjustment of RF signal delivered to the output connector.
3. *MULTIPLIER:* Four step ladder type Attenuator, multiplies RF output x1-x10-x100 and x1000, used for coarse adjustments.
4. *SELECTOR SWITCH:* Selects either modulated or pure RF signal. Also permits modulation from an external source.
5. *RF OUTPUT:* Connect coaxial cable supplied with the instrument for either modulated or unmodulated RF signals from 75kc to 150mc. *Note;* Put ground

lead of coaxial cable to B- of receiver. Not necessarily the chassis.

6. *AUDIO OUTPUT:* For 400 cycle Audio Signal and external modulation connect coaxial cable to connector marked "AUDIO OUTPUT." If external modulation is desired, turn selector switch to the RF position.

For best accuracy, the center of the scale should be used. Although when switching from band to band, the frequency will remain accurate.

3-MICRO-CYCLE VERNIER TUNING

The Micro-cycle vernier tuning has many applications that will be found after use. Below are the two main uses of the system.

1. For aligning FM receivers: The important characteristic in the alignment of FM receivers is the band pass of the IF's. By using the vernier dial to shift the frequency accurately on each side of the center frequency, an accurate alignment can be obtained. The chart for this is provided on Page 8.

2. THE EICO Model 315 is very accurate and stable. Once a frequency is accurately checked against some standard and noted, it can be repeated within .02% accuracy, thus the vernier scale can be used for individual calibration.

4-ALIGNMENT OF AM RECEIVERS

Modern Radio Receivers employ from two up to eight, ten or even more circuits to achieve the selectivity desired.

These circuits, however, are of little benefit unless all of them are working at their proper frequencies simultaneously. Only someone acquainted with the alignment of Receivers in a Radio Production Department, or someone engaged in Radio Service work who has adjusted a Receiver on which someone has

tightened all of the adjusting screws, can realize how dead a Receiver can sound when all of its tuned circuits are out of adjustment any considerable extent. The purpose of aligning a Receiver is two-fold to adjust it for maximum performance, and to make the dial indicate to within two or three per cent the frequency of the station being received. Since a trimmer adjustment is more sensitive when the circuit capacity is low, the trimmer adjustment is usually made near the high-frequency end of the tuning range. If the adjustment is made at the very end of the range, the maximum mistracking over the adjacent portion of the band will be greater than if an alignment point is chosen some small distance from the extreme high-frequency end of the tuning range. In the broadcast band, 1400 K.C. is usual choice and is the frequency recommended as standard by the Institute of Radio Engineers. On short-wave band on the same receiver, it is a good practice to align them at the same position on the gang condenser. Most manufacturers give the correct alignment information in the Receivers instruction book.

DUMMY ANTENNA - In order to make allowance for the effects that the outside antenna will have on the alignment of the Receiver, a substitute for the antenna called a dummy antenna representing the average antenna is used to connect the Signal Generator to the Antenna connection of the Receiver. For receiver frequency ranges up to 1700 K.C. the average antenna is essentially a capacity of 200 Micromicrofarads, if used on a high impedance primary. On frequencies above 1700 K.C. the average antenna can be represented by a 400 ohm carbon resistor.

TRF RECEIVERS - On a TRF Receiver, all tube circuits operate simultaneously at one frequency. Aligning a factory built receiver having a dial calibration to match the coils and condensers used, the dial is set to indicate the frequency at some signal of known frequency and the individual circuit adjusted to maximum performance on the signal at that setting of the condenser.

SUPER-HETERODYNE RECEIVERS - On a Super-Hetero-

dyne Receiver, circuits must operate at three different frequencies, properly related, if satisfactory performance is to obtained. Beginning with the circuit closest to the output tubes, the intermediate-frequency circuits must all operate at the same frequency in order to give satisfactory amplification. Actually they will work over a wide frequency range, but if they are operated very far from the intermediate frequency specified for the given dial, coils and tuning condensers, the dial indication will be in error more than the customary few percent and, in the case of Receivers employing special cut tracking plates in the Oscillator condensers, serious mistracking of the Oscillator with other tuned circuits will result, producing a loss in sensitivity and reduction in image-ratio.

I. F. ALIGNMENT - The first adjustment on a Super-Heterodyne Receiver is to align the intermediate-frequency amplifier at the correct frequency. The transformer should be adjusted to give the strongest signal by adjusting, in turn each of the adjustments on all of the I. F. transformers. The intermediate frequency stages should be aligned first and in their reversed order, starting at the stage immediately preceding the second detector. For this procedure the coaxial cable is connected to the grid of the tube preceding the stage under alignment, and the ground clip to the Receiver ground. Since it is essential that the operating characteristics of a stage should not be altered, this connection to the grid should be made with the grid lead in place. This procedure should be continued until all of the IF transformers have been aligned properly. When the alignment of the IF amplifier is completed, alignment of the RF and oscillator circuits should be made.

OSCILLATOR ALIGNMENT - Connect the appropriate dummy antenna between the high side of the Signal Generator output and the antenna connection of the Receiver, and set the frequency of the Signal Generator to an appropriate frequency on the band to be aligned, this is usually about 80% of the maximum frequency tunable on that band - set the Receiver

dial to the corresponding frequency. Turn the volume and sensitivity controls of the Receiver full on; now turn the Generator attenuator to high output and adjust the Oscillator trimmer until a signal is heard. Reduce the signal from the Signal Generator as alignment proceeds, always using as little input as possible because weak signals permit a more accurate alignment than strong signals. Care should be taken that the alignment condenser and not the series padding condenser be used for this adjustment.

RF AND ANTENNA ALIGNMENT - Next align the RF Amplifier circuit. On the band below 6 megacycles the frequency of the RF amplifier circuit has very little effect upon the Oscillator frequency, but at higher frequencies the adjustments of the RF circuit have a slight effect upon the frequency of the Oscillator; consequently it is necessary, when aligning a high-frequency RF amplifier, to ROCK the gang condenser very slightly as the alignment proceeds to be sure that a shift in Oscillator frequency has not shifted the Heterodyne signal out of range of the IF amplifier. The Antenna circuit is then aligned in the conventional manner.

OSCILLATOR PADDING - Shifting the tuning dial to a point about 10% up from its lowest frequency, the Oscillator circuit should be padded for best tracking with the Antenna and RF circuits. If the Radio Set is sufficiently sensitive to produce a readily discernable hiss in the speaker, the easiest way to pad the Oscillator circuit is to adjust the padding Condenser for maximum hiss or minimum noise. When this point is padded it is well to turn to the high frequency end and re-align that part of the band.

5-ALIGNMENT OF FM RECEIVERS

The first step is to align the primary and secondary trimmers of the discriminator transformer. To do this connect the output cable of the signal generator between grid and ground the limiter tube.

If two limiter tubes are used the signal generator is connected across the grid circuit of the second limiter tube. The VOM is now connected across both cathodes of the discriminator. A VTVM may also be used for this purpose. With the signal generator set for an unmodulated signal at the IF frequency specified by the manufacturer, the Primary trimmer is first adjusted for Maximum output on the indicating meter. Following this the Secondary trimmer is adjusted for minimum output on the meter scale. It may be found that when adjusting the secondary three positions of the trimmer will result in a minimum reading. The correct position is the one where a slight rotation of the trimmer in either direction of the minimum position increases the meter reading.

The VOM is now connected in series with the ground return of the grid resistor of the limiter, with the instrument set at the most suitable microamp range. If a VTVM is used the meter is connected across this grid resistor, using the lowest scale that will render satisfactory readings, The IF trimmers of the various stages are now aligned for maximum output starting with the last IF stage and proceeding to the first as in the conventional superheterodyne. The setting of the signal generator must not be disturbed from the original position of the dial setting where the original discriminator adjustments were made.

In some receivers it will be found that the IF transformers are overcoupled to obtain a broad bandpass characteristic. When aligning this type of IF transformer it will be found that two consecutive peaks are obtained when each trimmer is rotated. The procedure in this case is to adjust each trimmer for a dip between these peaks. This occurs when both adjustments result in the same output meter readings. It is advisable at this point to repeat all the foregoing adjustments, starting with the discriminator and ending with the first IF. This is to insure symmetry of response in the discriminator and in the IF stages.

In order to check response symmetry in the IF

stages, the signal generator is shifted 50 to 100 kc on each side of resonance, at the same time observing the grid current in the limiter stage. The number of divisions of the vernier dial corresponding to the bandwidth specified in the instructions may be found on the chart on page 7. Symmetrically aligned IF transformers will give fairly equal but opposite readings for equal and opposite frequency deviations from resonance. The linearity of the discriminator is checked in a similar manner, the voltmeter being connected now across both diodes of the discriminator.

ALIGNMENT OF FM OSCILLATOR CIRCUIT - The alignment of the oscillator and RF trimmers is conventional. The signal generator is set at approximately 105 mc. and the receiver dial to this same setting. Then, with the output indicating meter connected in the grid circuit of the limiter, the oscillator and RF trimmers are tuned consecutively for maximum output.

It will be observed that the procedure varies insofar as the discriminator transformer is first detuned, thereby permitting all adjustments to be observed on the meter connected across the diode cathode connections of the discriminator. This is a timesaving procedure. Notice that the final adjustment is made on the discriminator transformer.

FM RATIO DETECTOR ALIGNMENT - The alignment of FM receivers employing ration detectors.

Equipment necessary: RF Signal Generator and VTVM

1. *Connect VTVM from ground to audio lead of radio detector (discriminator). Connect generator tuned to 10.7 mc to grid of third FM i-f tube through .01 mfd capacity. Use minimum signal necessary for good indication in all following:*
2. *Turn secondary slug of ratio detector transformer (top slug) out as far as it will turn.*
3. *Tune primary for maximum output.*
4. *Connect generator to grid of second FM i-f tube.*
5. *Tune primary and secondary of third FM i-f*

transformer for maximum output.

6. Connect generator to grid of first FM i-f tube.

7. Tune primary and secondary of second FM i-f transformer for maximum output.

8. Connect generator to converter grid through 10,000 ohm resistor and .1 mfd. capacitor.

9. Tune primary and secondary of first FM i-f transformer for maximum output.

10. Tune secondary of ration detector transformer for zero of minimum output.

11. After all adjustments, the signal generator should be tuned 50-100 kc on each of 10.7 mc. If equal deflections of opposite polarity on the VTVM are shown, the 1-f system is aligned. Deflections unequal by more than 10% or so indicate inaccurate alignment.

USE OF MICRO-CYCLE BANDSPREAD VERNIER TUNING FO FM ALIGNMENT

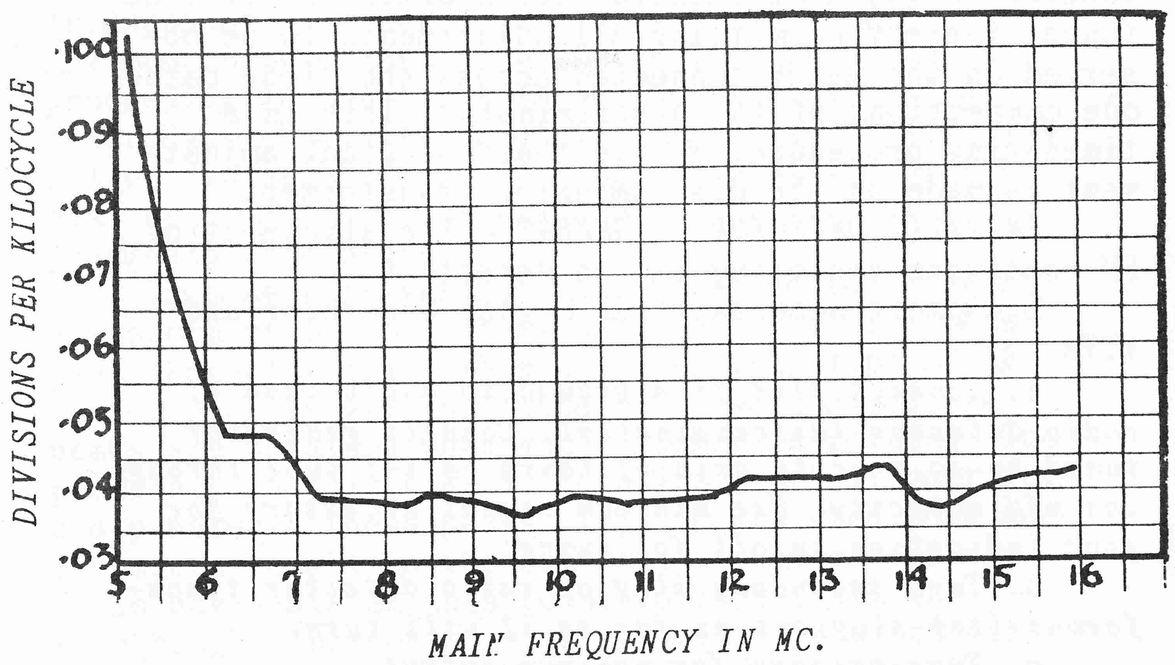

EXAMPLE: To get FM Band width of 75 kc each side of center i-f frequency of 10.7 mc.

At 10.7 mc, .038 divisions movement equals 1 kc movement; for 75 kc movement, .038 x 75 equals 2.85 divisions

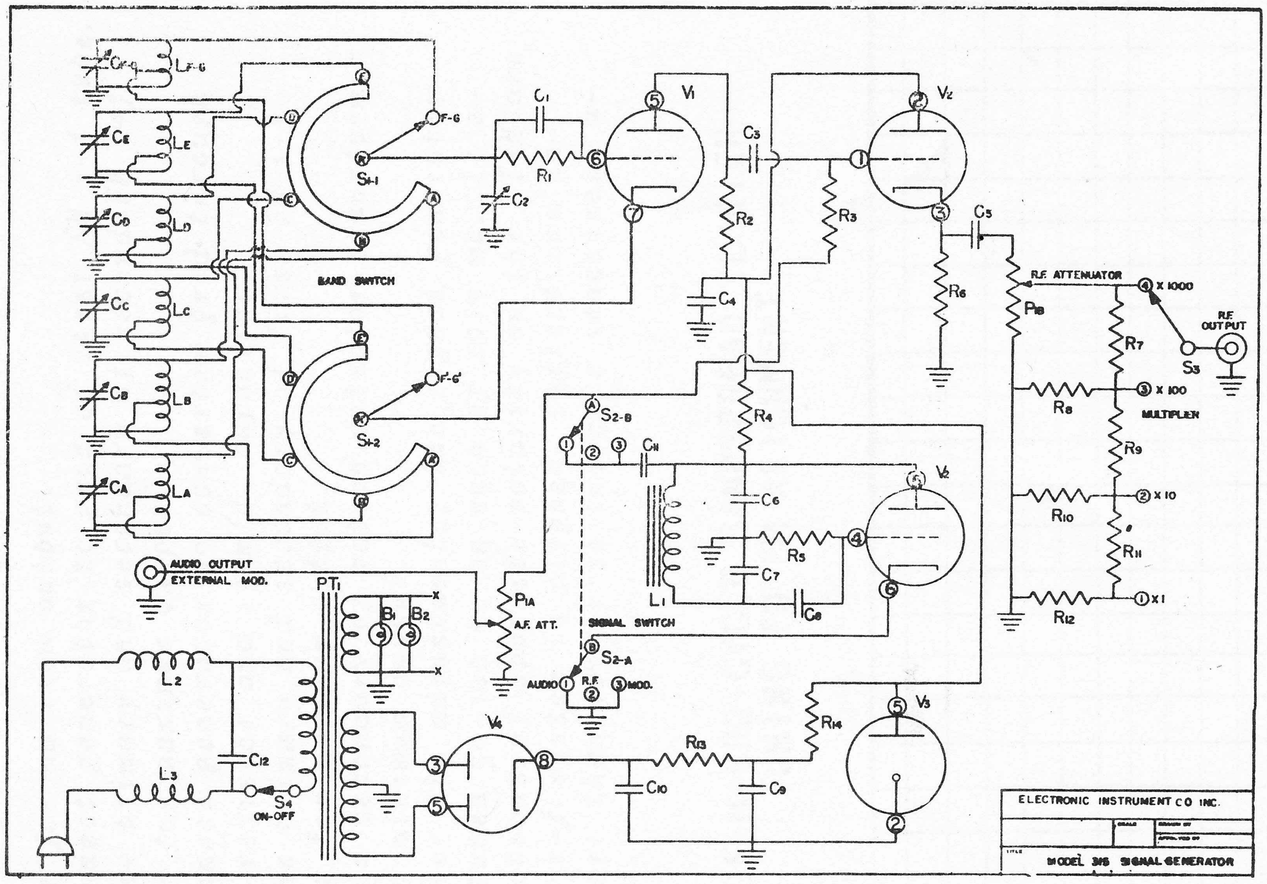

SYMBOL	PART #	SPECIFICATION
B1	1	#47 bulb
B2	1	#47 bulb
C1	2	100 mmfd cond.
C2	3	Main tuning cond.
C3	2	100 mmfd cond.
C4	4	.05 mfd cond.
C5	5	.001 mfd cond.
C6	6	.25 mfd cond.
C7	7	.5 mfd cond.
C8	4	.05 mfd cond.
C9,C10	8	Dual 10 mfd cond.
C11	9	.01 mfd cond.
C12	9	.01 mfd cond.
L1	54	Audio choke
L2,L3	55	Line filter
LABC	56	Low frequency coils
LDE	57	Middle frequency coils
LFG	58	High frequency coils
P1	59	1000 ohm 250K dual pot.
PT1	60	Power transformer
R1	61	22K ohm 1/2 watt
R2	62	510 ohm 1/2 watt
R3	63	1 meg 1/2 watt
R4	61	22K ohm 1/2 watt
R5	64	68K ohm 1/2 watt
R6	65	10K ohm 1/2 watt
R7	66	1000 ohm 1/2 watt
R8	67	100 ohm 1/2 watt
R9	66	1000 ohm 1/2 watt
R10	67	100 ohm 1/2 watt
R11	66	1000 ohm 1/2 watt
R12	67	100 ohm 1/2 watt
R13	68	6K ohms, 10 watt
R14	69	1K ohms, 1 watt
S1	70	2P-6Pos. switch
S2	71	2P-3Pos. switch
S3	72	1P-4Pos. switch
S4	73	SPST switch
V1	76	6C4 tube
V2	77	6SL7 tube
V3	78	VR150 tube
V4	79	6X5 tube

EICO

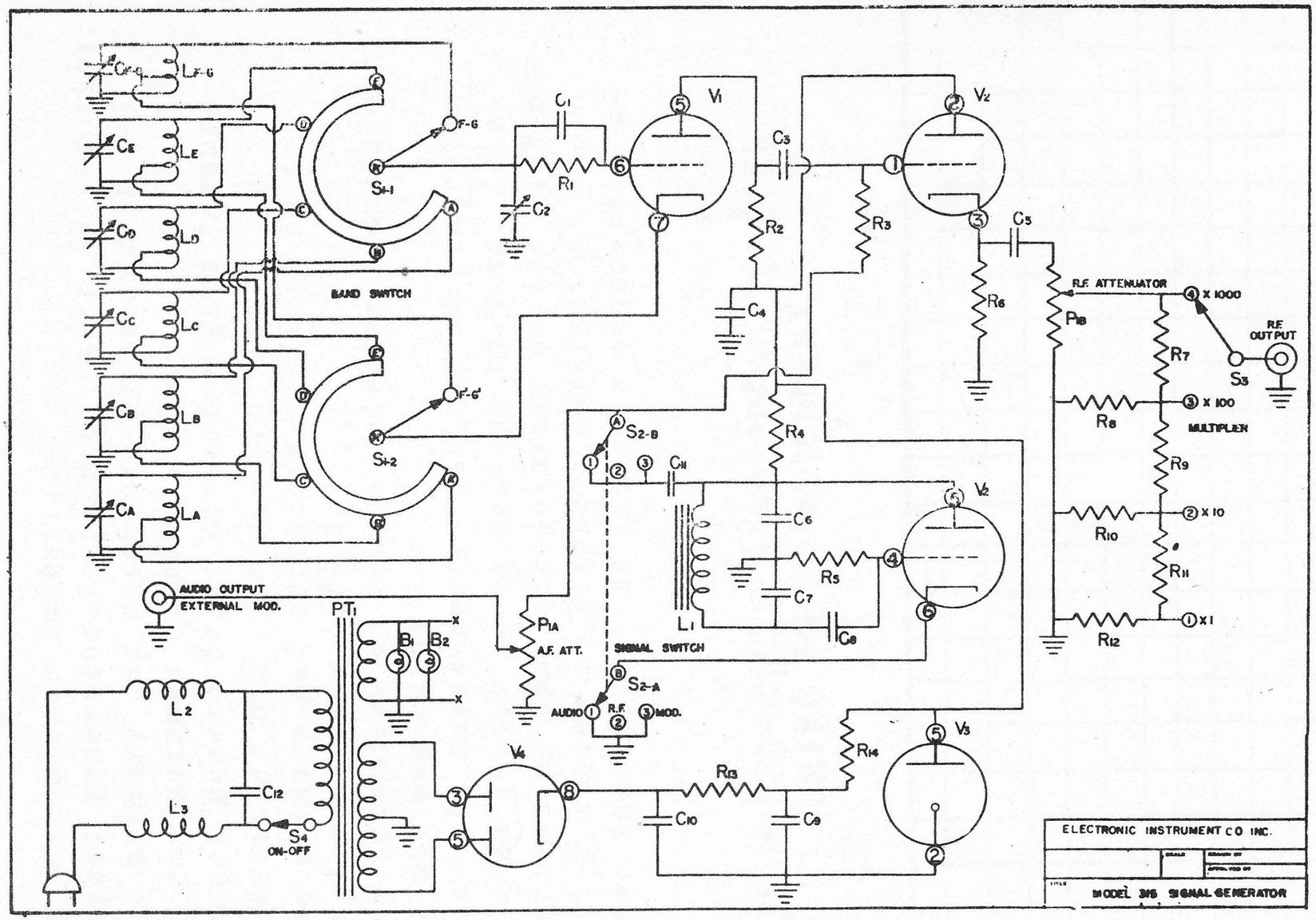

SYMBOL	PART #	SPECIFICATION
B1	1	#47 bulb
B2	1	#47 bulb
C1	2	100 mmfd cond.
C2	3	Main tuning cond.
C3	2	100 mmfd cond.
C4	4	.05 mfd cond.
C5	5	.001 mfd cond.
C6	6	.25 mfd cond.
C7	7	.5 mfd cond.
C8	4	.05 mfd cond.
C9,C10	8	Dual 10 mfd cond.
C11	9	.01 mfd cond.
C12	9	.01 mfd cond.
L1	54	Audio choke
L2,L3	55	Line filter
LABC	56	Low frequency coils
LDE	57	Middle frequency coils
LFG	58	High frequency coils
P1	59	1000 ohm 250K dual pot.
PT1	60	Power transformer
R1	61	22K ohm 1/2 watt
R2	62	510 ohm 1/2 watt
R3	63	1 meg 1/2 watt
R4	61	22K ohm 1/2 watt
R5	64	68K ohm 1/2 watt
R6	65	10K ohm 1/2 watt
R7	66	1000 ohm 1/2 watt
R8	67	100 ohm 1/2 watt
R9	66	1000 ohm 1/2 watt
R10	67	100 ohm 1/2 watt
R11	66	1000 ohm 1/2 watt
R12	67	100 ohm 1/2 watt
R13	68	6K ohms, 10 watt
R14	69	1K ohms, 1 watt
S1	70	2P-6Pos. switch
S2	71	2P-3Pos. switch
S3	72	1P-4Pos. switch
S4	73	SPST switch
V1	76	6C4 tube
V2	77	6SL7 tube
V3	78	VR150 tube
V4	79	6X5 tube

EICO